PDCN	REV.	APPV DATE	REVISIONS	DWN	DSGN	CHK	APPV
	A		INITIAL RELEASE REF DWG 4808-6000 REV B				

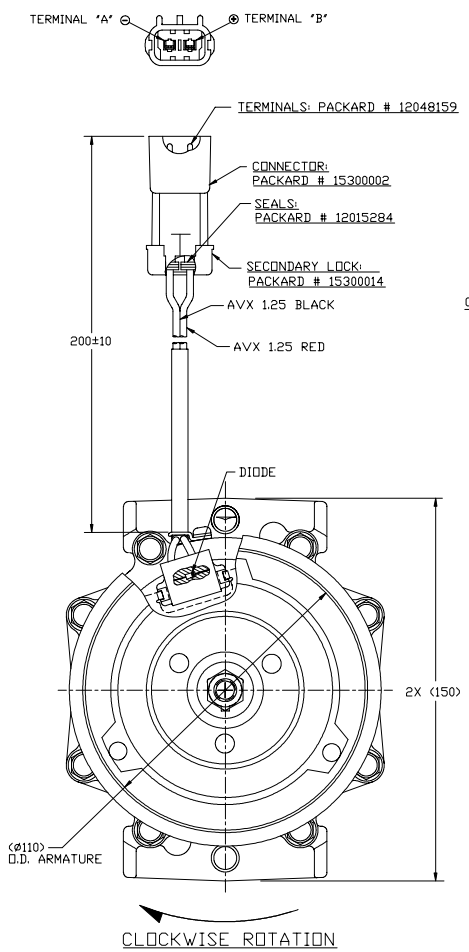

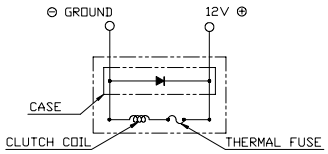

CIRCUIT DIAGRAM
(FOR REFERENCE)

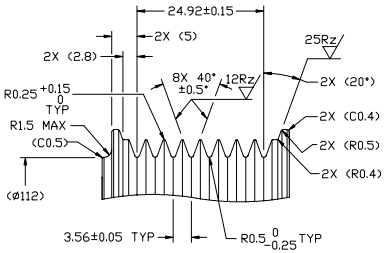

DETAIL B
SCALE 2:1

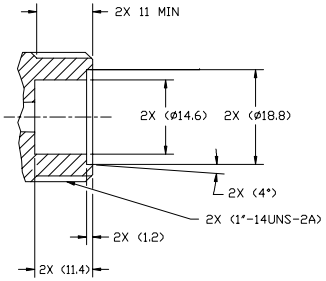

SECTION C-C
SCALE: 2:1
TYPICAL BOTH PORTS
(SECTION SHOWN WITH SEAL CAP REMOVED)

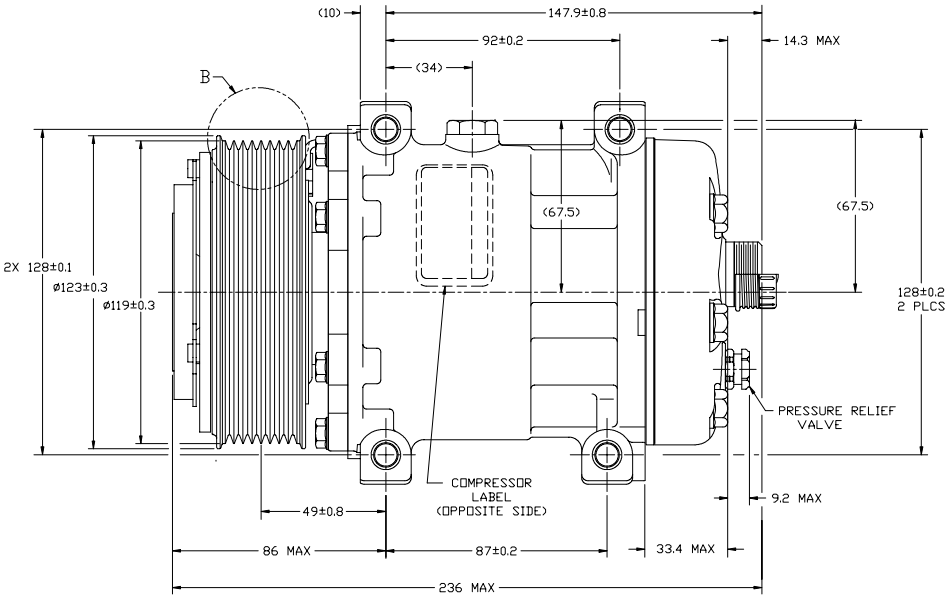

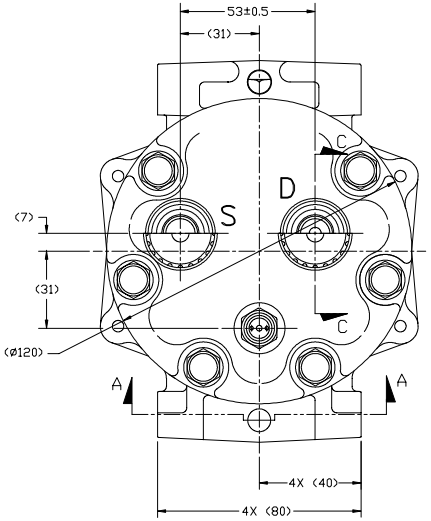

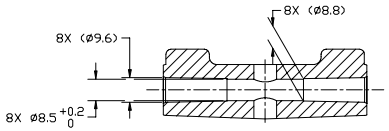

SECTION A-A

COMPRESSOR SPECIFICATIONS (REF)

DISPLACEMENT PER REVOLUTION	154.9 cc / rev. (9.5cu.in. / rev.)
MAXIMUM ALLOWABLE R.P.M.	8000 R.P.M.
MAXIMUM ALLOWABLE CONTINUOUS R.P.M.	6000 R.P.M.
REFRIGERANT	R134a
OIL (SP-15)	300 cc (10.1 fl.oz.)

CLUTCH SPECIFICATIONS (REF)

RATED VOLTAGE	DC 12V
BREAKAWAY TORQUE	3.5 kgf-m min. @ 12V
MINIMUM ENGAGEMENT VOLTAGE	7.5V @ AIR GAP 0.6mm
POWER CONSUMPTION	49 watts max.
BELT TYPE	PV8 TYPE
MAXIMUM ALLOWABLE BELT TENSION	120 Kgf
PULLEY DIAMETER	Ø119mm (4.69 in.)
CLUTCH TYPE	SUPER HEAVY DUTY

DO NOT SCALE

REV. LEVEL		
A	RELEASED FOR: ENGG. DEVELOPMENT	
	DSGN	Teresa Gorski
	DWN	Teresa Gorski
	CHK	M.Balthazar
	APPV.	E.M.Arrieta
	APPV. DATE	
A	RELEASED FOR: DESIGN VALIDATION	
	DSGN	Teresa Gorski
	APPV.	E.M.Arrieta
	APPV. DATE	1/4/08
A	RELEASED FOR: PRODUCTION VAL'D.	
	DSGN	Teresa Gorski
	APPV.	E.M.Arrieta
	APPV. DATE	1/4/08
A	RELEASED FOR: PRODUCTION	
	DSGN	Teresa Gorski
	APPV.	E.M.Arrieta
	APPV. DATE	1/23/08

SANDEN
SANDEN INTERNATIONAL (U.S.A.), INC.

DRAWN SCALE REF 1:1 | PLOTTED SCALE REF 1:1 | METRIC

This drawing and the information contained hereon are CONFIDENTIAL and PROPRIETARY to Sanden International (U.S.A.), Inc., are received in CONFIDENCE and shall not be used, copied, or disclosed to others without the written permission of Sanden International (U.S.A.), Inc.

INTERPRETATION OF THIS DRAWING PER ASME Y14.5M-1994

THIRD ANGLE PROJECTION | SIZE D

MATERIAL:

NAME: COMPRESSOR

DWG. NO. 4084-6000 | REV A