| PDCN | REV. | APPV DATE | REVISIONS | DWN | DSGN | CHK | APPV |
|---|---|---|---|---|---|---|---|
| | | | INITIAL ISSUE | | | | |
| 2006310 | | 11/20/06 | PRV: 4307-6407 WAS 4967-6470 10.4 MAX WAS 9.7 MAX | RSR | RM | DRL | RM |
| 2007258 | | 03/25/08 | 6522-6340 (3GE) FIELD COIL ASSY WAS 6746-6140 (3DS) | TG | TG | SN | EMA |
| 8893 | | 12/10/09 | 4967-6470 WAS 4307-6470, 9.7 MAX WAS 10.4 MAX | JS | JS | SN | HF |

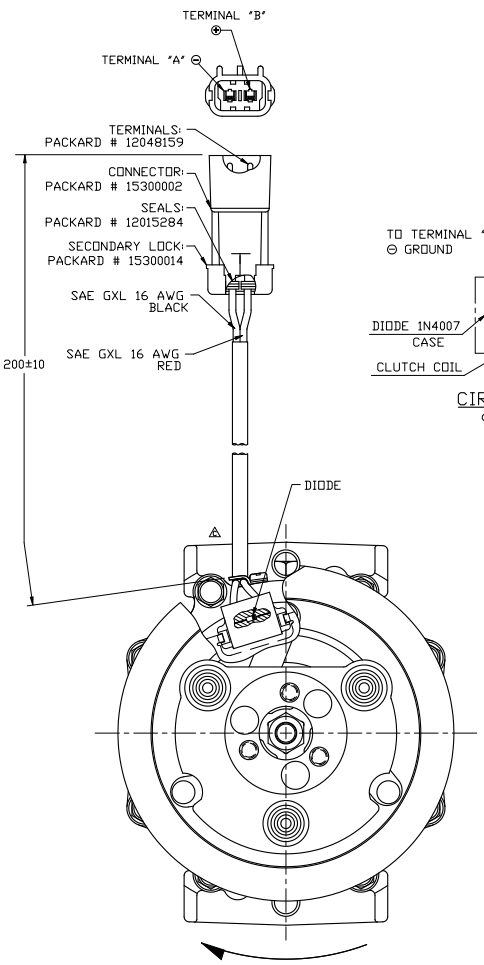


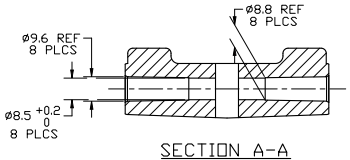


SECTION A-A

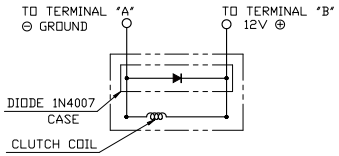


CIRCUIT DIAGRAM ⚠
(FOR REFERENCE)

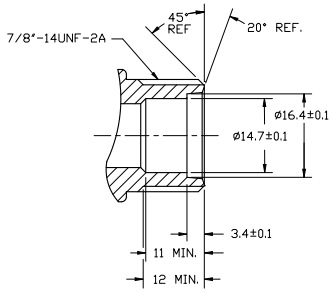


SECTION B-B
SCALE: 2:1
(SECTION SHOWN WITH SEAL CAP REMOVED)

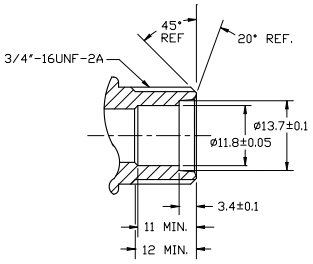


SECTION C-C
SCALE: 2:1
(SECTION SHOWN WITH SEAL CAP REMOVED)

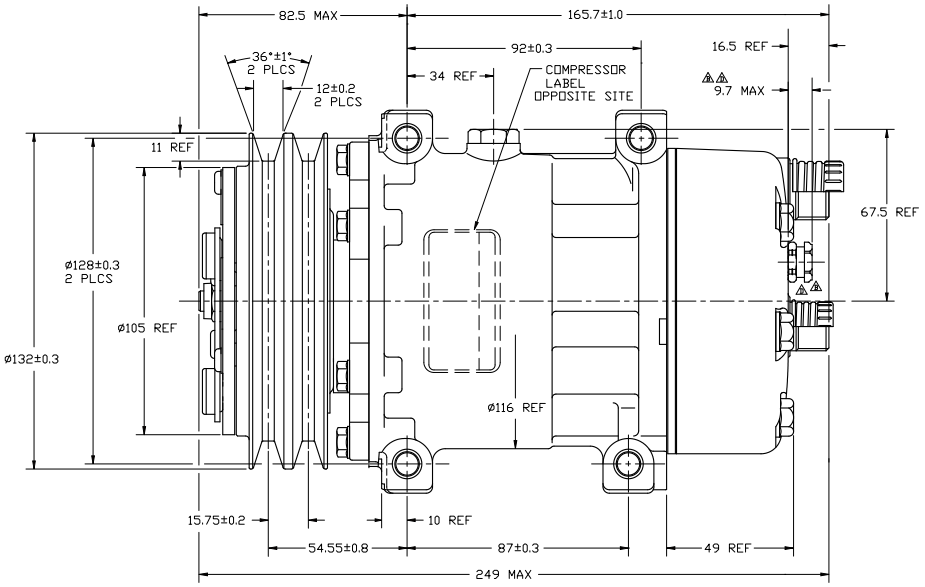


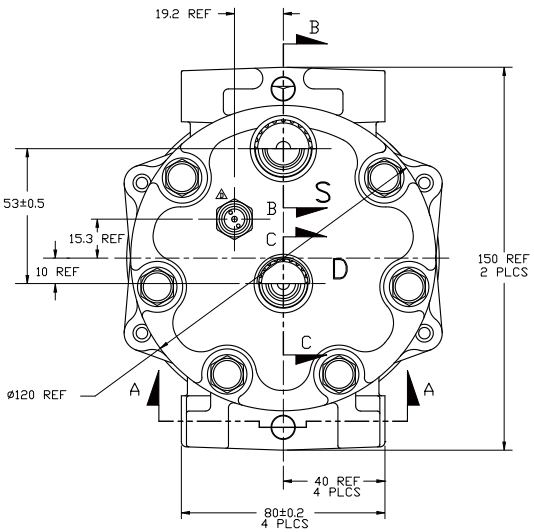


## COMPRESSOR SPECIFICATIONS (REF)

| | |
|---|---|
| DISPLACEMENT PER REVOLUTION | 154.9 cc / rev. ( 9.5cu.in. / rev. ) |
| MAXIMUM ALLOWABLE R.P.M. | 8000 R.P.M. |
| MAXIMUM ALLOWABLE CONTINUOUS R.P.M. | 6000 R.P.M. |
| REFRIGERANT | R134a |
| OIL ( SP-15 ) | 300 cc ( 10.1 fl.oz. ) |
| WEIGHT | TBD |

## CLUTCH SPECIFICATIONS (REF)

| | |
|---|---|
| RATED VOLTAGE | DC 12V |
| BREAKAWAY TORQUE | 3.5 kgf-m min. @ 12V |
| MINIMUM ENGAGEMENT VOLTAGE | 7.5V @ AIR GAP 0.6mm |
| POWER CONSUMPTION | 49 watts max. |
| BELT TYPE | A TYPE |
| MAXIMUM ALLOWABLE BELT TENSION | 60 kgf per belt |
| PULLEY DIAMETER | ø132mm ( 5.2 in. ) |
| CLUTCH TYPE | HEAVY DUTY |

DO NOT SCALE

| REV. LEVEL | | |
|---|---|---|
| A | RELEASED FOR DESIGN DEVELOPMENT | DSGN KS HF; M. Harrington; DWN; R. Rodriguez; CHK; Dennis Lee; APPV. NB JC; APPV. DATE 04/12/04 |
| A | RELEASED FOR DESIGN VALIDATION | DSGN M. Harrington; APPV. NB JC; APPV. DATE 04/13/04 |
| A | RELEASED FOR PRODUCTION VAL.'B. | DSGN M. Harrington; APPV. NB JC; APPV. DATE 04/13/04 |
| A | RELEASED FOR PRODUCTION | DSGN M. Harrington; APPV. NB JC; APPV. DATE 04/13/04 |

SANDEN
SANDEN INTERNATIONAL ( U.S.A. ), INC.

DRAWN SCALE REF 1:1 | PLOTTED SCALE REF NONE | METRIC

This drawing and the information contained hereon are CONFIDENTIAL and PROPRIETARY to Sanden International (U.S.A.), Inc., are received in CONFIDENCE and shall not be used, copied, or disclosed to others without the written permission of Sanden International (U.S.A.), Inc.

INTERPRETATION OF THIS DRAWING PER ASME Y14.5M-1994

THIRD ANGLE PROJECTION | SIZE D

MATERIAL: –

NAME: COMPRESSOR

DWG. NO. 4306-6000 | REV D